Monitoring of Toxic Gases and Land Slide Prevention Utilizing IoT

Gunjan Shailesh Joshi* and Dr. Achala Deshmukh**
*Dept. of Electronics and Telecommunication, Sinhgad College of Engineering, SCOE
Pune, India
E-mail: joshigunjan7090@gmail.com
**Associate Professor, Dept. of Electronics and Telecommunication, Sinhgad College of Engineering, SCOE
Pune, India
E-mail: achala.deshmukh@gmail.com

Abstract: Mining exercises discharges poisonous and exceptionally destructive gasses. This causes a loads of weight in the mining business. In this manner to expand the profitability and decrease the cost of mining alongside the thought of the security of specialists, a creative approach is required. A constant observing framework that utilizing WSN, in which there are different sensors. This framework screens encompassing some ecological parameters, for example, dampness, harmful gasses and land sliding with the assistance of two remote sensor hubs utilizing IoT. This framework shows the parameters on the Monitor at the underground segment, where sensor units will be introduce and additionally on the observing unit. It will be useful to all diggers who show inside the mine to spare their life before any causality happens. A caution will triggers when the sensor esteems crosses the edge level. This framework additionally stores every one of the information in the PC for future investigation.

Keywords: Microcontroller, Internet of Things(IoT), Wireless sensor Network(WSN).

Introduction

Underground mining opertion turns out to be a dangerous to the extent the wellbeing and the security of the workers are conserned. These dangers are had a place with various strategies utilized for separating minerals. In underground mine, the ventilation frameworks are extremely basic to supply enough oxygen. So it is important to actualize of dig observing frameworks for the wellbeing reason.

For reasons unknown wired system is impractical and furthermore it is tedious. So it is fundamental to have a remote sensor arrange mine checking framework.

Wireless sensor networks (WSNs) have earned a huge consideration in current situation. It is a unique specially appointed, self-sorting out system that comprises of huge number of hubs organized in a wide territory. Remote sensor arrange for the most part comprise of sensor hubs in charge of detecting wonder which are in charge of gathering information from remote hubs and dealing with the system.

The Internet of Things(IoT) is a current correspondence innovation in which the items will be furnished with transceivers,controllers for advanced correspondence and furthermore ready to speak with each other and with the clients. IoT depends on WSN innovation in which the frameworks are checked over the web. It can be worked over bluetooth, RF module,Wi-Fi module. WSN will be use to recognize the harmful gasses display in the mine and furthermore will advise the perilous circumstance in correct time for the wellbeing of mineworkers. A constant observing framework is create to give clear viewpoint of the underground mine. This sytem shows the parameters on the Monitor at the underground area, where the sensor unit and checking unit is introduced. It will be useful to all mineworkers show inside the mine to spare their life before any causality happens. Caution will trigger when sensor esteems crosses the limit level. This framework likewise stores every one of the information in the PC for future viewpoint.

Related Works

In underground mine, ventilation frameworks are basic to supply sufficient oxygen, keeping up non-perilous and non-deadly situations and a viable working mine. To screen an underground mine, can help executing danger situations. Joining ventilation observing frameworks enables a mine to keenly take off ventilation upgrades in perspective of the broad data given by the checking frameworks. Sudden changes in the ventilation framework are recognized by the observing framework, allowing fast move to be made. New and making correspondence and following frameworks can be utilized to screen mines all the more capably and exchange the data to the surface.

The movement of innovation has permitted mine observing strategies to end up noticeably more advanced, yet blasts in underground coal mines still happen. The security issues of coal mines have slowly transformed into a noteworthy worry for the general public and country. The event of fiascos in coal mines is chiefly because of the unforgiving condition and fluctuation of working conditions. Along these lines, it makes the execution of dig observing frameworks basic for the security reason. Wired system frameworks used to be a pattern for customary coal mines, which have truly assumed a critical part in securely generation in coal mines. With the consistent amplification of misusing zones and profundity extension, laneways have turned out to be visually impaired zones, where various inconspicuous perils are hung out. Besides, it is impractical there to lay costly links, which is likewise tedious. In this way, it is basic to have a remote sensor organize mine checking framework, which can be arranged in such mines keeping in mind the end goal to have a protected creation inside.

Wireless sensor networks (WSNs) have earned a critical overall consideration in current situation. A WSN is a unique impromptu, multi-jump and self-sorting out system that comprises of countless orchestrated in a wide zone with a specific end goal to screen the marvels of intrigue. Remote sensor arranges mostly comprise of sensor hubs or bits in charge of detecting a wonder and base hubs, which are in charge of dealing with the system and gathering information from remote hubs.

These little estimated sensors are very reasonable contrasted with customary sensors and furthermore require restricted registering and handling assets. These sensor hubs can recognize, measure and gather data from nature and in light of some neighborhood factual choice process, they can pass on the gathered information to the control room.

It has three major advantages over wired monitoring network systems:

1 There is no need of links to lay and simple establishment in dazzle regions, diminishing expense of the observing framework. The quantity of hubs can be expanded to dispose of visually impaired ranges. Additionally, it offers a general correspondence and assignment of the objective.

2 The thick hubs guarantee the information securing with high precision and ideal information transmission, and further acknowledgment of ongoing checking framework for mine condition.

3 A bit of processing capacity, stockpiling limit with information combination of sensor hubs make them appropriate for the remote checking framework.

This paper proposes a Mine wellbeing framework which utilizes the integration of Wireless sensor nodes(WSNs), Cloud Networking and IoT that give the existence of poisonous gasses and Moisture of land in underground mine utilizing sensors and microcontrollers and mindful to the checking and sensor unit. Likewise the database give online the primary server for future review. The Proposed framework bolsters greater adaptability and security. This framework is essentially comprising of three fundamental segments; the sensor nodes, Wi-Fi association and a Raspberry-Pi Board. The Raspberry-Pi board is designed by the administration situated engineering. The sensor unit detects the poisonous gasses and land dampness show in the underground mine and furthermore in which heading the gasses are spread with the assistance of remote sensor hubs and transfer the information utilizing Microcontroller. At that point the information is transmitted and afterward gotten by the Raspberry-Pi demonstrate where it is situated in sensor and control unit in the underground mine. The information are transferred utilizing Wi-Fi to the backend server. At where the client can read the information for reference and furthermore for future investigation.

Advantages of the Proposed System

- Detection of different toxic gases within mining environment.
- Detection of Land sliding using IoT.
- Develop the Technology to where the data is able to monitored all over the world.
- Increase the Safety of Miners.

Implementation

In this System, for the checking of harmful gasses and land sliding counteractive action utilizing IoT for controlling of microcontroller in light of the Raspberry-Pi board. Where the Raspberry-Pi is an open source which is utilized for programming and equipment part on the board.

As the correspondence between the Raspberry-Pi is remote, the availability between them is set up by the utilization of RF module and Bluetooth module.

Gas and Moisture sensors are utilized to check the genuine ecological condition inside the mine. These Gas and Moisture sensors are associated with the perticular arduino uno board. These arduino uno gathers information from the sensors. There are two remote sensor hub for gathering the information. One hub is utilized for gathering sensor information and the other hub is utilized for in which bearing the gasses are spread. In the wake of gathering the information from the sensor , the hub educated observing unit segment under the mine. A caution with the sensors are utilized with the end goal of security inside the mine, where if any spilling of lethal gasses or probability of land sliding in the mine, it will sets an alert and will advise to the observing unit.

The systematise of the project implementation as of the Architecture of its implementation is given below:

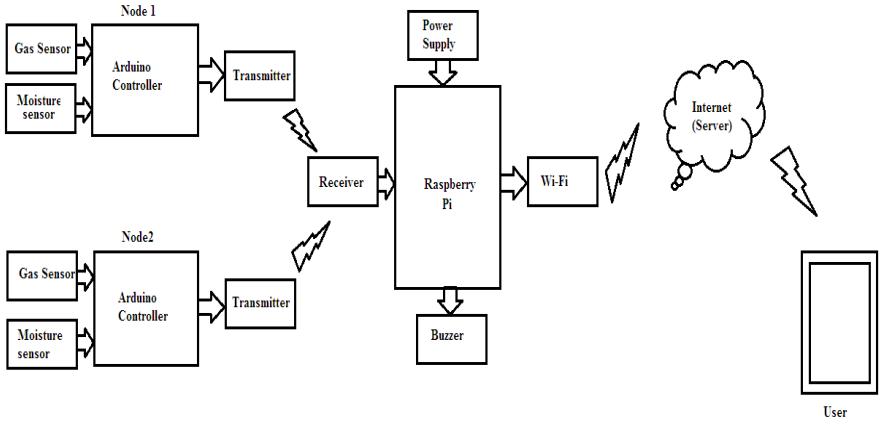

Figure 1. Architecture of the system

In the wake of accepting the information to the microcontroller, the microcontroller transmit the information remotely and got by the collector at the Raspberry pi show. Here the microcontroller utilized Bluetooth and RF module to transmit and get information remotely. The microcontroller utilized Bluetooth and RF transmitter for every remote sensor hub and the opposite side Raspberry pi utilized Bluetooth and RF collector to get the information remotely. Raspberry-Pi board is combined with the Wi-Fi switch or LAN link for associating the web. The Data are transferred to the server utilizing MQTT convention. MQTT is an open subscribe based light weight informing convention for use on the highest point of TCP/IP convention. MQTT convention contains MQTT Broker and MQTT Client. Where MQTT intermediary is in charge of accepting every one of the messages, Filtering them, choose who is keen on it and sending the message to the supporter customer. It is additionally in charge of system association from customers and procedures subscribe and withdraw demands from customers. The MQTT Client is a gadget that associated with the microcontroller. Here Raspberry pi is go about as a MQTT customer. MQTT customer can be both distributer and supporter at a same time. MQTT customer is in charge of distribute application message, subscribe to ask for application message, withdraw to evacuate a demand for application messages and disengage from the server. MQTT is most appropriate for IoT and M2M correspondence due to it little code impression, bring down transmission capacity necessity and lower control utilization on gadget. At last the information shows on the site page. Accordingly client can read the information utilizing website page and furthermore utilize the information for future investigation.

Hardware Description

For this system, there are various hardwares are to be used,which are given below:

Carbon Monoxide Sensor(MQ3)

MQ-3 sensor consist of two parts. One is heating circuit and the other one is the signal output circuit. In which heating circuit is used for time control and signal output circuit is accurately respond changes of surface resistance of the sensor. This sensor senses the gases like methane(CH4), Carbon Monoxide(CO), Benzene, Hexene, Alcohol, LPG.

Figure 2. MQ-3 Sensor

The enveloped MQ-3 have six pins in which four of them are used to fetch the signals and other two are used for providing heating current.

Mositure Sensor

This sensor can be used to test the moisture of soil, when the soil is having water particles, the module output is at high level, else the output is at low level. The operating voltage of this sensor is regulated 5v Dc.

Figure 3. Moisture Sensor

System Output

The sensor unit detects the dangerous gasses and land dampness display in the underground mine with the assistance of remote sensor hubs and transfer the information utilizing Microcontroller. The beneath table gives the estimations of gas sensors for typical and outrageous condition. In normal condition, There is no dangerous gasses display in the mine and the estimation of gas sensor is 40. In extreme condition, Toxic gasses are available in the mine and the estimation of gas sensor is 345.

Gas Sensor

Table 1.Reading of Gas Sensor

Operating Voltage	Condition	Output
5V	Normal	40
5V	Extreme	345

The threshold level for gas is above 300 and for moisture is 45-50.

The below table gives the values of moisture sensors for normal and extreme condition. In normal condition, There is no moisture present in the soil. In extreme condition, There is a moisture present in the soil.

Moisture Sensor

Table 2. Reading of Moisture Sensor

Operating Voltage	Condition	Output
5V	Normal	5
5V	Extreme	55

In extreme condition whether the gas esteems or dampness esteems crosses the edge level, the caution will trigger and educate to the observing unit.

These information are transferred remotely utilizing RF module and Bluetooth module to the Raspberry pi. At that point the information transferred to the server utilizing LAN link or WiFI. At long last the information shows on the page. Where client can read the information utilizing site page and furthermore utilize the information for future examination.

The output of this system is given as below:

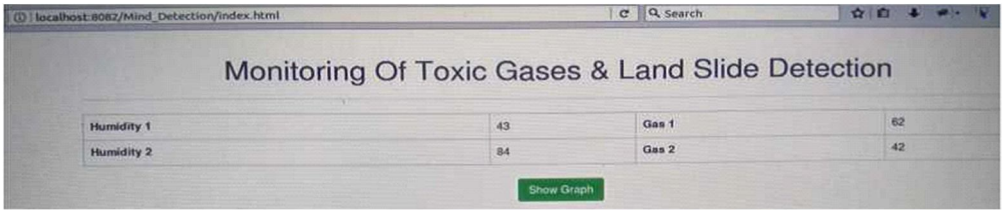

Figure 4. Output of the system

Conclusion

In this paper, The Study on constant checking of lethal gasses and Moisture of Land introduce in underground mine break down utilizing remote sensor organize. This framework is created to give clearer point of view of the mine and furthermore show the parameters on the Monitor at the underground segment. It will be useful to every one of the mineworkers who exhibit inside the mine to spare their life before any causality happens. An alert will trigger when the sensor esteems crosses the limit level. It additionally sends the sensor parameters to the cloud. This framework will likewise stores the information in the PC for future review.

References

[1] Juan Felipe corso arias, Yeison julian camargo Barjas-International journal of advanced computer science and information technology(IJACSIT) vol.3,no.3,Page:327-343,Nov.2014.

[2] Andrea Zanella, Nicoli Bui, Lorenzo Vangelista, Angelo Castellani, Michele Zorzi-Senior Member,IEEE-IEEE Internet Of Things For smart cities. Vol.1,no.1, Feb.2014.Page:1-4.

[3] Hasan omar al-sakran-king saud university,saudi arabia:International Journal Of Advanced Computer Science and Application(IJACSA) vol.6,no.2,Nov.2015.

[4] Bo, C., Xiuqan, q., Budan, w., Xiaokun, w. et al. IEEE "Restful Web service Mashup based coal mine safety monitoring and control automation with wireless sensor network."vol.2 Page:740-744,Aug.2012.

[5] Dange , K.M., Patil, R.T. ,International journal of engineering science invention(IJESI) "Design of monitoring system for coal mine safety based on MSP430." Vol.2.Page:14-19,July 2013.

[6] Li, W., Li, Z., Liu, W., Wei, P. (2009),IEEE "The remote monitoring and analysis system of mine safety based on Virtual instrument."vol.2 Page:451-455.

[7] V. Gokul, Sitaram Tadepalli (2016),IEEE "Implementation of a wifi based plug and sense dvice for dedicated air pollution monitoring using IOT.".vol.2. page: 355-358

[8] J. Li, J. Wall and G. Platt, "Indoor air quality control of HVAC Syatem", IEEE Int. conf. on Modelling, Identification and Control., page:756-761, Aug 2010.

[9] He, X. Fan and D. Chai, "On-line control strategy of fresh air to meet the requirement of IAQ in office buildings," in IEEE Conf. on Industrial Electronics and application, page:845-848,June 2010.

[10] Q. Lu, C. Wang and L. Shen," Multi-zone particle model:The effect of ventilation on indoor concentration", in IEEE Int. conf. on Computer Application and syaten Modelling, Page:503-507,Nov.2010.